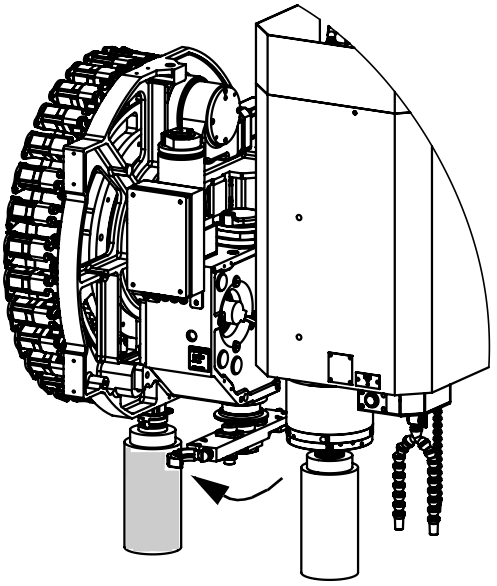

⑨ ATC arm rotates CW direction and ATC arm in standby position.

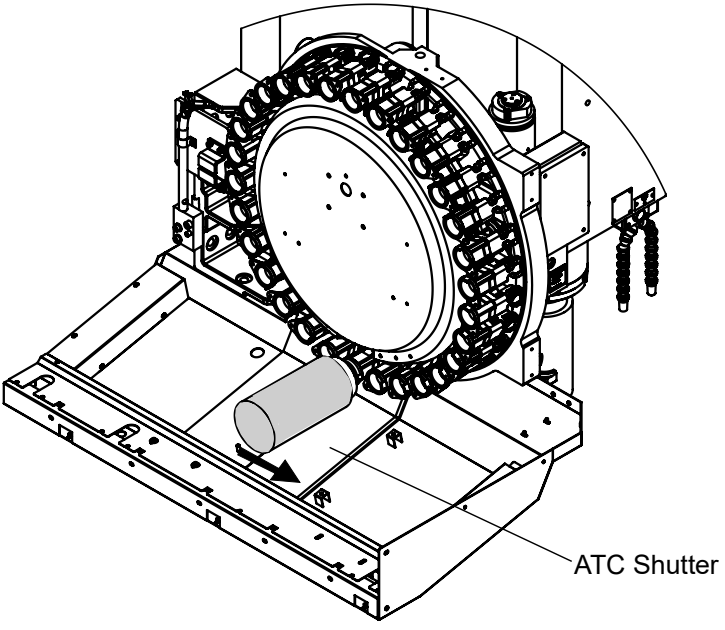

⑩ ATC pot horizontal and shutter closes.